WP-Combi ‘AC Power from the battery’

Recreational vehicles • Caravans • Pleasure craft • Holiday homes

Datasheet

Sine wave inverter/ battery charger • ‘230 VAC from the battery’

WP-Combi-12/2000-80 • WP-Combi-24/3000-60 • WP-Combi-48/3000-30

Silent AC power, whenever you need it. Without a generator! Integrated battery charger to recharge the battery.

- Up to 3 kW 230 VAC/ 50 Hz power,
- Silent and clean operation
- Ideal to operate with solar and wind systems
- Automatic switching from shore/ land power to inverter power
- Fully automatic 3-stage battery charging
- Adjustable to work with limited land or genset power
- Available for 12, 24 and 48 VDC batteries

whisper power

green energy solutions

green energy solutions

Model	WP- COMBI 12/2000-80 Art. nr. 61112280	WP- COMBI 24/3000-60 Art. nr. 61124360	WP- COMBI 48/3000-30 Art. nr. 61148330
Inverter	True Sine wave		
Nominal battery voltage	12VDC	24VDC	48VDC
Input voltage range	10..16VDC	20..32VDC	40..64VDC
Power @ 25°C	2000W	3000W	3000W
Continuous Power @ 40°C	1800W	2600W	2600W
Power 1 min. @ 25°C	2500W	3300W	3300W
Power 20 sec. @ 25°C	3000W	4500W	4500W
Maximum load	fully protected up to short circuit		
Maximum a-symmetric load	1000W	1500W	2000W
Load detection (standby)	>15W	>20W	>20W
Power factor	up to 1	up to 1	up to 1
Efficiency (@ full load)	88%	92%	92%
Zero load power	<20W	<25W	<25W
Standby power (load search)	<5W	<5W	<5W
Output voltage	230VAC +/- 3%		
Output frequency	50Hz +/- 0.5%		
Harmonic distortion (voltage)	THD<3%	THD<3%	THD<3%
Overload and short-circuit protection	auto disconnect after 3 start attempts		
Overheat protection	Yes (The WP-Combi has to be restarted manually)		
Charge characteristic	IUU Multi step		
Battery type	Bulk voltage (12V/24V/48V)	ABS voltage (12V/24V/48V)	Float voltage (12V/24V/48V)
Gel	14.40V / 28.80V / 57.60V	14.25V / 28.50V / 57.00V	13.80V / 27.60V / 55.20V
AGM	14.40V / 28.80V / 57.60V	14.25V / 28.50V / 57.00V	13.80V / 27.60V / 55.20V
Open lead acid	14.25V / 28.50V / 57.00V	14.25V / 28.50V / 57.00V	13.25V / 26.50V / 53.00V
Traction	14.60V / 29.20V / 58.40V	14.45V / 28.90V / 57.80V	13.25V / 26.50V / 53.00V
Equalizing voltage (for 30 minutes)	15.5 VDC	31.0 VDC	62.0 VDC
Maximum charging current	Max. 80A (adjustable)	Max. 60 A (adjustable)	Max. 30 A (adjustable)
Temperature compensation	-30mV/°C (by external temperature sensor)	-60mV/°C (by external temperature sensor)	-120mV/°C (by external temperature sensor)
Slave charger	12V/3A	24V/3A	No
Power factor correction	yes	yes	yes
Operating modes (front accessible)	On / Off / Charger only		
Local user interface	State of load, state of charge, inverter on/off, charger only mode, AC present, current control, charger settings (capacity, battery type, low voltage detection settings, operation mode)		
Remote panel (RJ12)	State of load, state of charge, inverter on/off, AC present		
Input voltage range	194..250Vac (UPS mode) 170..265Vac (GEN mode)		
Input frequency range	45..65Hz (UPS mode) 40..70Hz (GEN mode)		
Input current max	30A (protected by internal circuit breaker)		
Charging input current (max charging current @ 230Vac)	4.5A (adjustable with the knob on the front)	6.6A (adjustable with the knob on the front)	8.4A (adjustable with the knob on the front)
Transfer time	10..15 ms (UPS mode) 2sec (GEN mode)		
Weight	23.5 kg	23.5 kg	23.5 kg
Dimensions	458 x 200 x 190 mm		
Protection degree	IP21		
Color	RAL 9006 (White aluminum) and RAL 7016 (Anthracite grey)		
Conformity	EN60950-1, EN55022, CE marking		
Operating temperature range	-10..40°C (derating from 40 to 65°C)		
Storage temperature	-40..70°C		
Relative humidity (operational)	0%-95%, non-condensing		
Ventilation	Forced air		
Warranty	1 year		
Battery connector	Two M6 screws		
AC connectors	M4 screw terminal blocks		

Remote panel

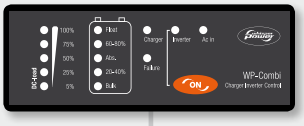

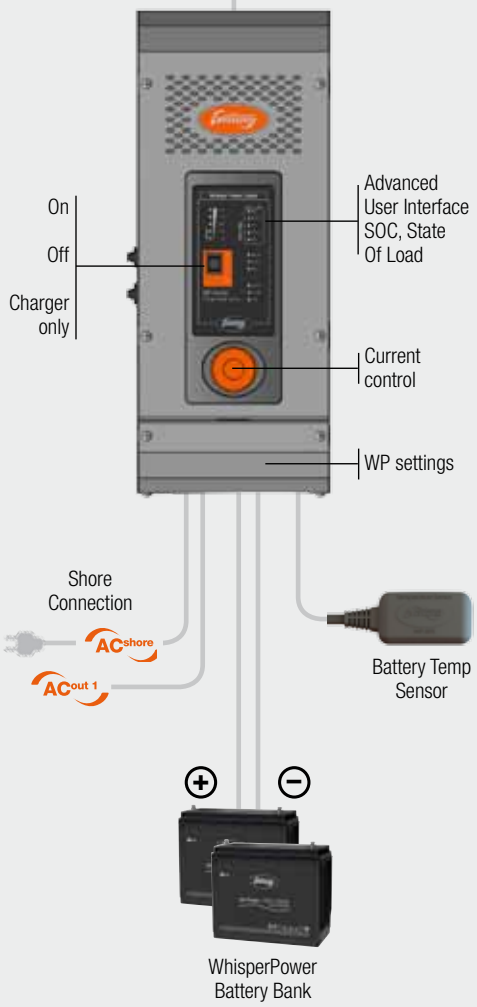

Table top or wall mounting

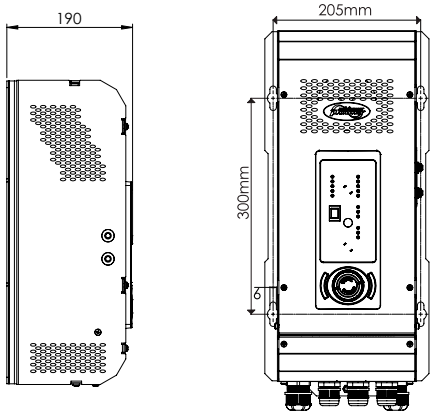

WP-Combi Accesoires

Art. Nr.	Item
61112050	Remote Panel WP-Combi

WhisperPower BV Kelvinlaan 82, 9207 JB Drachten, The Netherlands, Tel: +31 (0) 512 571 550, Fax: +31 (0) 512 571 599, info@whisperpower.com, www.whisperpower.com

20121029datasheetWPCombi